For HVAC, Irrigation, OEM, Commercial and Institutional Applications

Job Name _____ Contractor _____

Job Location _____ Approval _____

Engineer _____ Contractor's P.O. No. _____

Approval _____ Representative _____

LEAD FREE*

Butterfly Valves

Series BF-03-M2 Full Lug and BF-04-M2 Wafer

Sizes: 2" – 12" (50 – 300mm)** 200psi (13.8 bar) 14" – 24" (350 – 600mm)** 150psi (10.3 bar)

Watts Series BF resilient seated butterfly valve is available in sizes 2" – 24" (50 – 600mm)** in wafer or lug body design. Incorporating a 200psi (13.8 bar) pressure rating for 2" – 12" (50 – 300mm)** and a 150psi (10.3 bar) pressure rating 14" – 24" (350 – 600mm)**, the BF series butterfly is standardly constructed of a ductile iron body with a choice of either ductile iron, aluminum bronze, or 316 stainless steel discs and 416 stainless steel or 316 stainless steel shaft. A phenolic-backed seat (2"-12", 50-300mm)** or aluminum-backed seat (14" – 24", 350-600mm)** prevents the seat from collapsing or dislodging. Standard seat materials available include EPDM, Buna-N and Viton. The BF Series mounting pad is designed to ISO 5211 standard to accommodate lever handles, gear operators, or actuation.

The Watts Series BF butterfly valves are designed and manufactured for use with ANSI 125 or 150 Class flanges and comply with API 609 and MSS-SP 67 standards to meet the stringent requirements of HVAC, Irrigation, OEM, Commercial, Institutional, and Industrial applications.

Features

- **Body** – Available in Full Lug (BF-03-M2) and Wafer (BF-04-M2) styles designed for use between ANSI 125 and 150 flanges. Face-to-face dimensions comply with API 609 and MSS-SP-67. All valves are designed to accommodate 2" of insulation. The mounting pad is designed to ISO 5211 standard. The body material is ASTM A-536 ductile iron.
- **Disc** – Disc edge is machined and polished 360 degrees to assure leak-tight shutoff while minimizing operating torque. Positive, disc-to-shaft connection is provided by stainless steel precision taper pins. Discs are available in ductile iron, aluminum bronze, or 316 stainless steel.
- **Seat** – Phenolic or aluminum backed, non-collapsible, resilient seat is mechanically secured to allow for dead-end service usage to the full pressure rating in lug style valves. Full 360 degrees sealing isolates the body components from the media and provides the primary shaft seal. Seats are available in EPDM, Buna-N, and Viton.
- **Shaft** – One-piece shaft delivers positive disc-to-seat location with maximum strength. 416SS is standard shaft with ductile iron and aluminum bronze disc. 316SS shaft is standard with 316SS disc models.

  Three shaft bushings provide shaft support for proper alignment and minimal shaft deflection. Bi-directional shaft seals prevent external contamination of the stem area and provide backup for the primary shaft seal formed by the disc/seat interface.
- **Handle** – ISO 5211 top work design allows for standard 10 position handle 2" – 6" (50 – 150mm)** and manual, worm gear operators for 8" – 24" (200 – 600mm)** sizes. An infinite positioning locking handle is an available option on 2" – 12" (50 – 300mm)** valves. The posi-lok handle provides an infinite position stop, a memory stop, and a pad-locking device in the fully closed position.

***The wetted surface of this product contacted by consumable water contains less than 0.25% of lead by weight.**

****Metric Dimensions are nominal pipe diameter. This product is produced with ASME/ANSI flanged end connections.**

Watts product specifications in U.S. customary units and metric are approximate and are provided for reference only. For precise measurements, please contact Watts Technical Service. Watts reserves the right to change or modify product design, construction, specifications, or materials without prior notice and without incurring any obligation to make such changes and modifications on Watts products previously or subsequently sold.

WATTS®

BUTTERFLY VALVES

Dimensions

2" through 24"

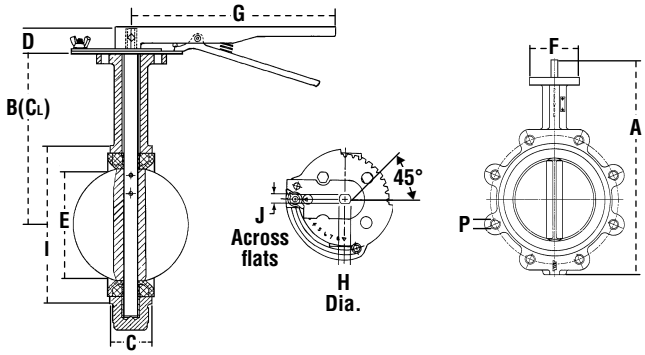

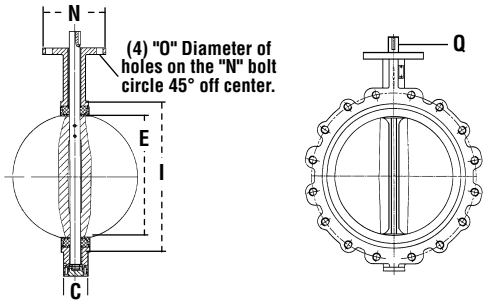

Size	A		B		C		D		E		F		G		H		I		J	
in.	in.	mm	in.	mm	in.	mm	in.	mm	in.	mm	in.	mm	in.	mm	in.	mm	in.	mm	in.	mm
2	10¾	273	6⅜	161	1⅝	42	1¼	32	2⅛	54	3 1/16	77	10½	267	½	13	3¾	95	⅜	9
2½	11⅝	295	6⅞	175	1¾	45	1¼	32	2½	64	3 1/16	77	10½	267	½	13	4¼	108	⅜	9
3	12⅛	308	7⅛	181	1¾	45	1¼	32	3⅛	79	3 1/16	77	10½	267	½	13	4¾	120	⅜	9
4	13⅜	346	7⅞	200	2	52	1¼	32	4⅛	105	3⅝	92	10½	267	⅝	16	6 1/16	154	7/16	11
5	14⅝	372	8⅜	213	2 5/16	56	1¼	32	4⅞	124	3⅝	92	10½	267	¾	19	7⅛	181	½	13
6	15⅝	397	8⅞	226	2 5/16	56	1¼	32	6⅛	156	3⅝	92	10½	267	¾	19	8 3/16	208	½	13
8	18⅞	479	10¼	260	2⅜	60	1¼	32	8	202	5	125	14	356	⅞	22	10¼	260	⅝	16
10	21¼	540	11½	292	2⅜	66	1¾	45	9⅞	251	5	125	14	356	1⅛	29	12⅝	320	13/16	21
12	24⅝	626	13¼	337	3	76	1¾	45	11⅞	301	6	150	14	356	1¼	32	14¾	375	–	–
14	26¾	679	14½	368	3	76	1¾	45	13⅛	333	6	150	–	–	1¼	32	15 15/16	405	–	–
16	30	762	15¾	400	3⅜	87	2	50	15⅜	391	6⅞	175	–	–	1 5/16	33	18½	470	–	–
18	31½	800	16⅝	422	4⅛	105	2	50	17⅜	442	6⅞	175	–	–	1½	38	20 1/16	525	–	–
20	35 5/16	897	18⅞	480	5⅛	130	2⅛	53	19⅜	493	8¼	210	–	–	1⅝	41	22¼	565	–	–
24	42⅞	1088	22⅛	562	6	152	2¼	58	23⅜	594	8¼	210	–	–	2	50	27 5/16	693	–	–

SEATING TORQUE Buna-N, EPDM		
Size	Normal Conditions	
in.	Wet lbs.	Dry lbs.
2	134	214
2½	190	289
3	250	387
4	390	644
5	600	959
6	907	1,542
8	1,697	2,919
10	2,500	4,857
12	3,300	7,071
14	3,500	7,305
16	5,500	10,027
18	8,200	13,437
20	10,000	17,925
24	18,680	28,020

GEAR DIMENSIONS: STD. WEATHERPROOF W/ HANDWHEEL								
Valve Size	Depth	Width	CL to HW	HW. Dia.	Height	CL to MT Pad	Turns Open/ Close	Unit Weight
in.	A	B	C	D	E	F		lbs.
2, 2½, 3	5.0	4.2	6.5	6.0	2.7	1.5	7.0	10.0
4	5.0	4.2	6.5	6.0	2.7	1.5	7.0	10.0
5, 6	5.0	4.2	6.5	6.0	2.7	1.5	7.0	10.0
8	7.0	6.2	9.5	12.0	3.0	1.8	7.5	27.5
10	7.0	6.2	9.5	12.0	3.0	1.8	7.5	27.5
12, 14	7.8	6.4	9.5	12.0	3.0	2.0	12.5	33.0
16	11.5	9.6	15.0	16.0	4.2	2.5	20.0	70.5
18	11.5	9.6	15.0	16.0	4.2	2.5	20.0	70.5
20	11.5	9.6	15.0	16.0	4.2	2.5	20.0	70.5
24	12.6	9.1	15.0	24.0	4.5	2.0	20.0	80.0

Size	TOP PLATE DRILLING				TAPPED LUG DATA			KEY WAY		WEIGHT lbs. †	
	N		O		BOLT CIRCLE	NO.	BOLT	Q			
in.	in.	mm	in.	mm	in. mm	Holes	P	in.	mm	88	87
2	2	50	¼	7	4¼ 121	4	⅝"-11UNC x 1⅝"	–	–	8	6
2½	2	50	¼	7	5½ 140	4	⅝"-11UNC x 1¾"	–	–	10	7
3	2	50	¼	7	6 150	4	⅝"-11UNC x 1¾"	–	–	10	7
4	2¾	70	⅜	10	7½ 191	8	⅝"-11UNC x 2"	–	–	17	12
5	2¾	70	⅜	10	8½ 216	8	¾"-10UNC x 2 5/16"	–	–	25	16
6	2¾	70	⅜	10	9½ 241	8	¾"-10UNC x 2 5/16"	–	–	27	20
8	4	102	½	13	11¾ 298	8	¾"-10UNC x 2⅜"	–	–	40	29
10	4	102	½	13	14¼ 362	12	⅞"-9UNC x 2⅝"	–	–	63	48
12	5	125	½	13	17 432	12	⅞"-9UNC x 3"	¼ x 1¼	6 x 32	107	78
14	5	125	½	13	18¾ 476	12	1"-8UNC x 3"	¼ x 1¼	6 x 32	156	99
16	5½	140	11/16	18	21¼ 540	16	1"-8UNC x 3⅜"	5/16 x 1 13/16	8x46	203	140
18	5½	140	11/16	18	22¾ 578	16	1⅛"-7UNC x 4⅛"	⅜ x 1 9/16	10x40	269	188
20	5½	165	⅞	22	25 635	20	1⅛"-7UNC x 5⅛"	⅜ x 1 9/16	10x40	392	248
24	5½	165	⅞	22	29½ 750	20	1¼"-7UNC x 6"	½ x 2⅜	13x60	593	450

†Weights are for valves with ductile iron or aluminum bronze discs. 2" – 12" have levers; 14" – 24" have bare shafts. Refer to Watts F-CDBF for gear operator weights.

C_V RATING (Full Open)	
Size	C_V Rating
in.	C_V
2	135
2½	220
3	302
4	600
5	1,022
6	1,579
8	3,136
10	5,340
12	8,250
14	11,917
16	16,388
18	21,705
20	27,908
24	43,116

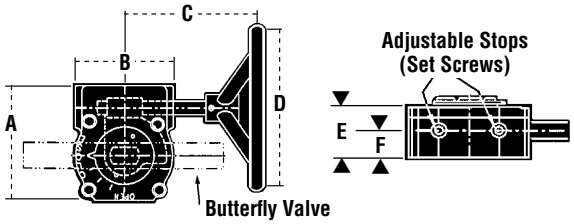

Materials

Body: ASTM A-536 Ductile Iron.

Bushing: Duralon(3): Teflon® - Dacron inner liner bonded to fiberglass - epoxy resin outer shell 2"-12" (50-300mm)**, Bronze 14"-24" (350-600mm)**

Stem O-rings: Buna-N

Disc: ASTM A-395 Ductile Iron / Electroless Nickel Plated
ASTM B-148 Aluminum Bronze
ASTM A-351 316 Stainless Steel

Shaft: 416 Stainless Steel
316 Stainless Steel on 316SS Disc Models

Seat: EPDM: +5°F to 248°F (-15°C to +120°C)
Buna-N: +14°F to 176°F (-10°C to +80°C)
Viton: -4°F to 302°F (-20°C to +150°C)

Note: Do not use EPDM when hydrocarbons are present.

How to Order Watts Series BF-M2

14 BF 03 121 1G M2

Size: 2" thru 24"

Series: 03: Full Lug, 04; Wafer

Body: 1: Ductile Iron

Disc: 1: Ductile Iron
2: Aluminum Bronze
3: 316 Stainless Steel*

Shaft: 1: 416 Stainless Steel
316SS on stainless steel disc models*

Seat: 1: EPDM 3: Viton
2: Buna-N

Operator: 0: No handle - 2" thru 24"
G: Gear Operator - 2" thru 24"
5: Standard handle (10-position only) - 2" thru 12"
P: Positioning / Locking Kit with handle - 2" thru 12"

M2 = Series

WATTS®

A Watts Water Technologies Company

ISO 9001-2008 CERTIFIED

USA: Tel: (978) 688-1811 • Fax: (978) 794-1848 • www.watts.com
Canada: Tel: (905) 332-4090 • Fax: (905) 332-7068 • www.watts.ca

© 2014 Watts